SPARKLE 50 RC

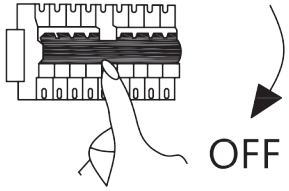

1

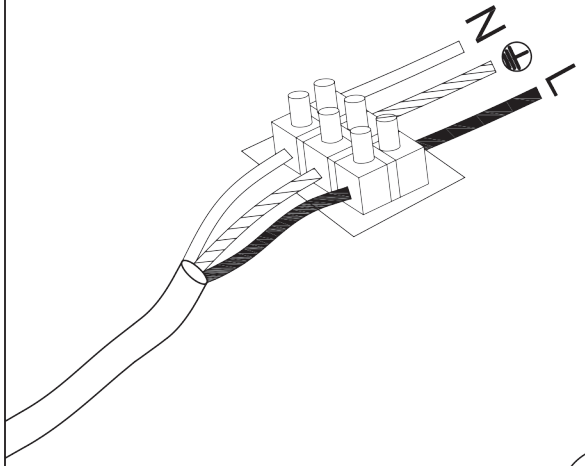

2

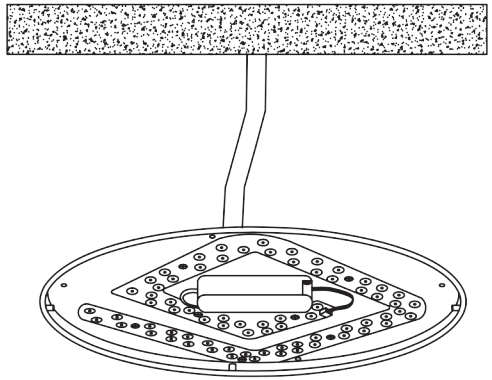

3

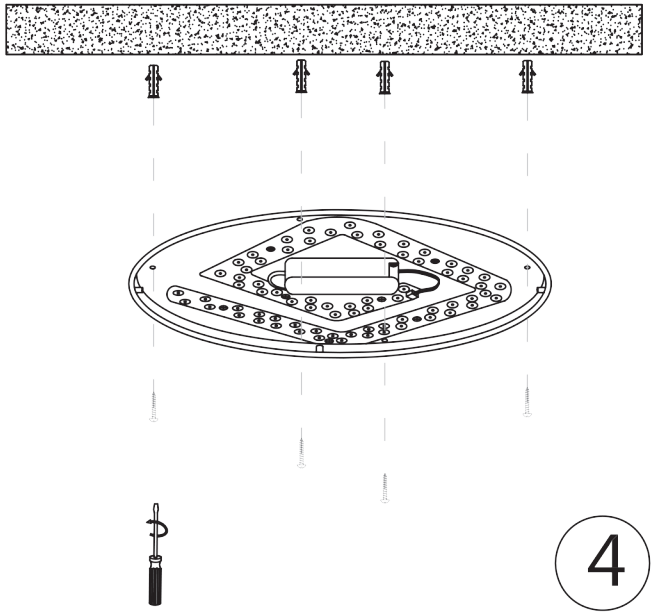

4

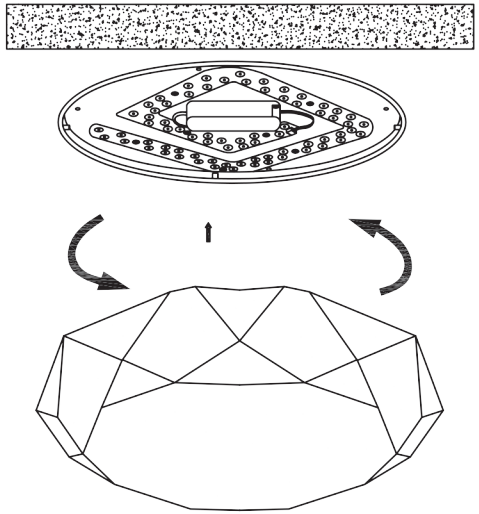

5

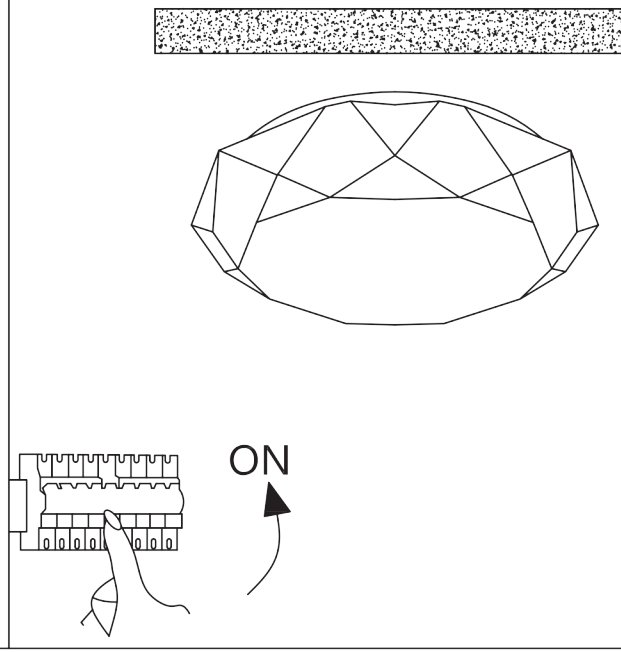

6